E.F.F. TYPE 61 TANK 5 1:35 SCALE PAPER MODEL

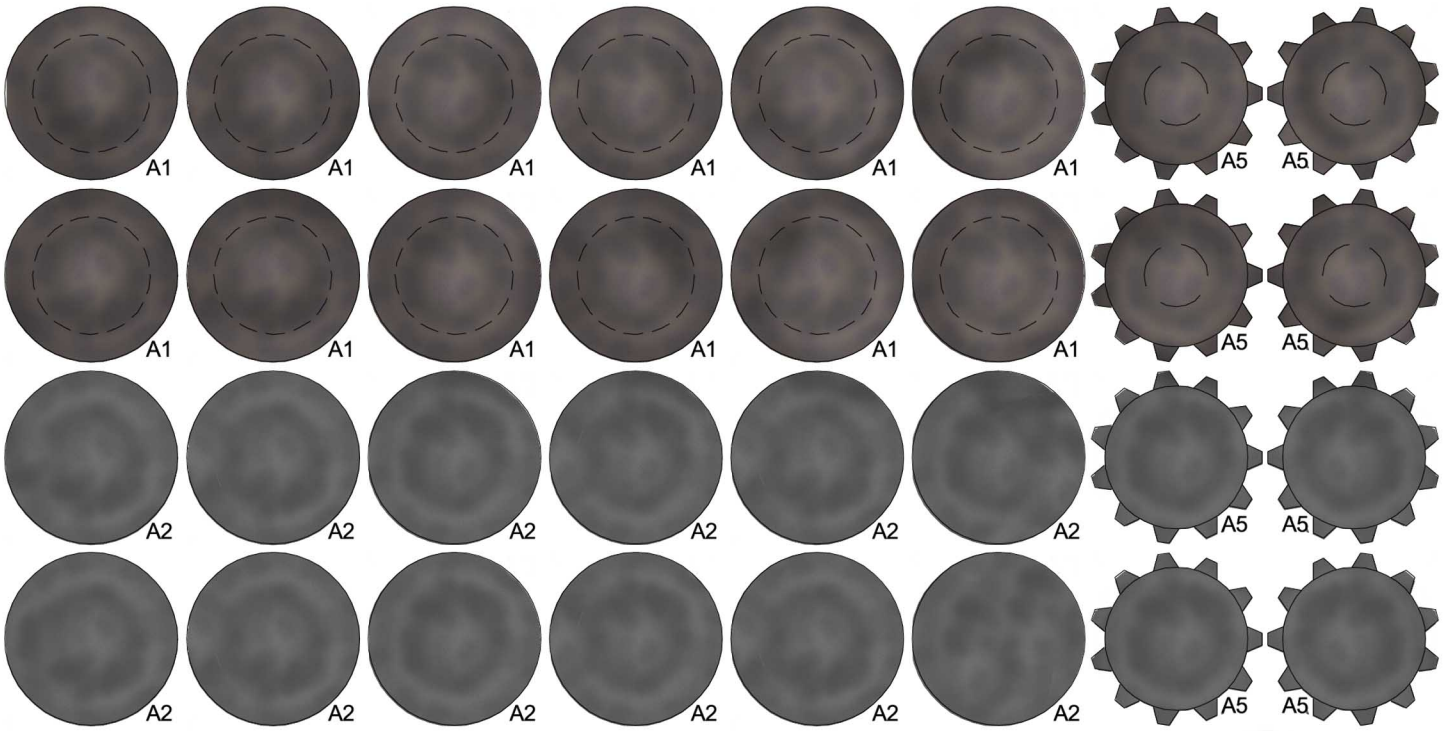

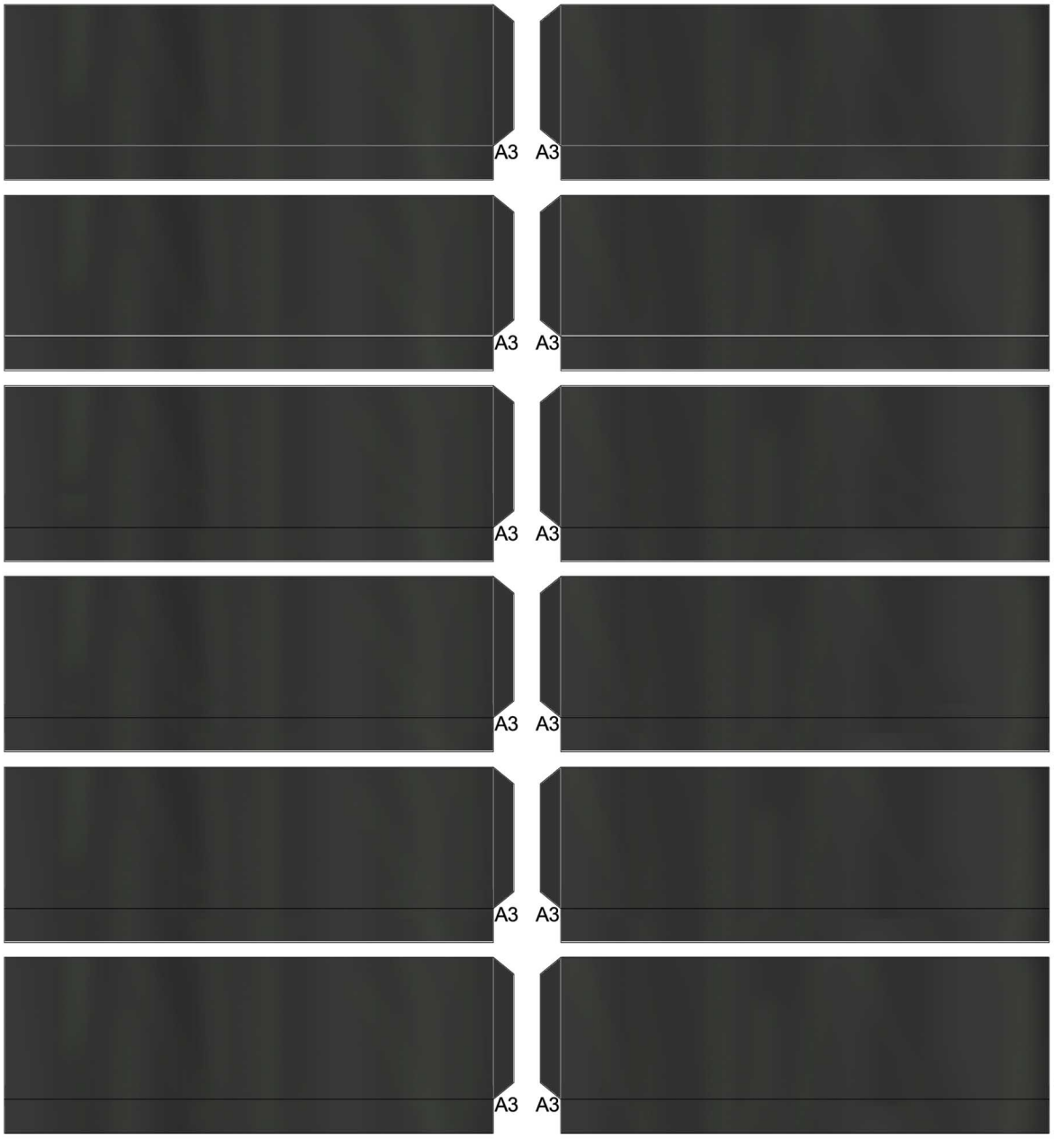

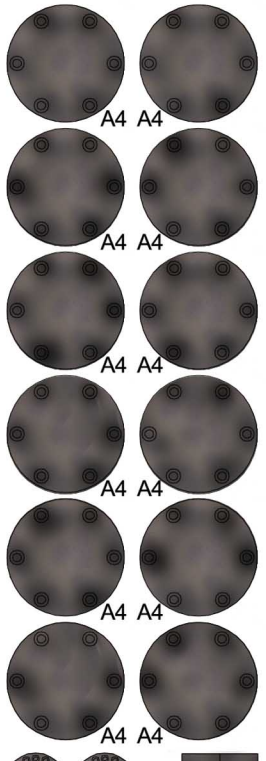

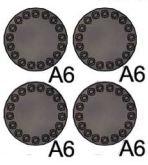



FOLD INSIDE

1. This pattern is originally scratch build based on many references and may not perfect yet so I would very appreciate for your critics and advices to improve my design on the next project.
2. This pattern is not for commercial purposes, except for educational. For other purposes, you may contact me for permission.

TEKZ_8@YAHOO.COM
MYHOBBYCRAFT.BLOGSPOT.COM

E.F.F. TYPE 61 TANK 5 1:35 SCALE PAPER MODEL

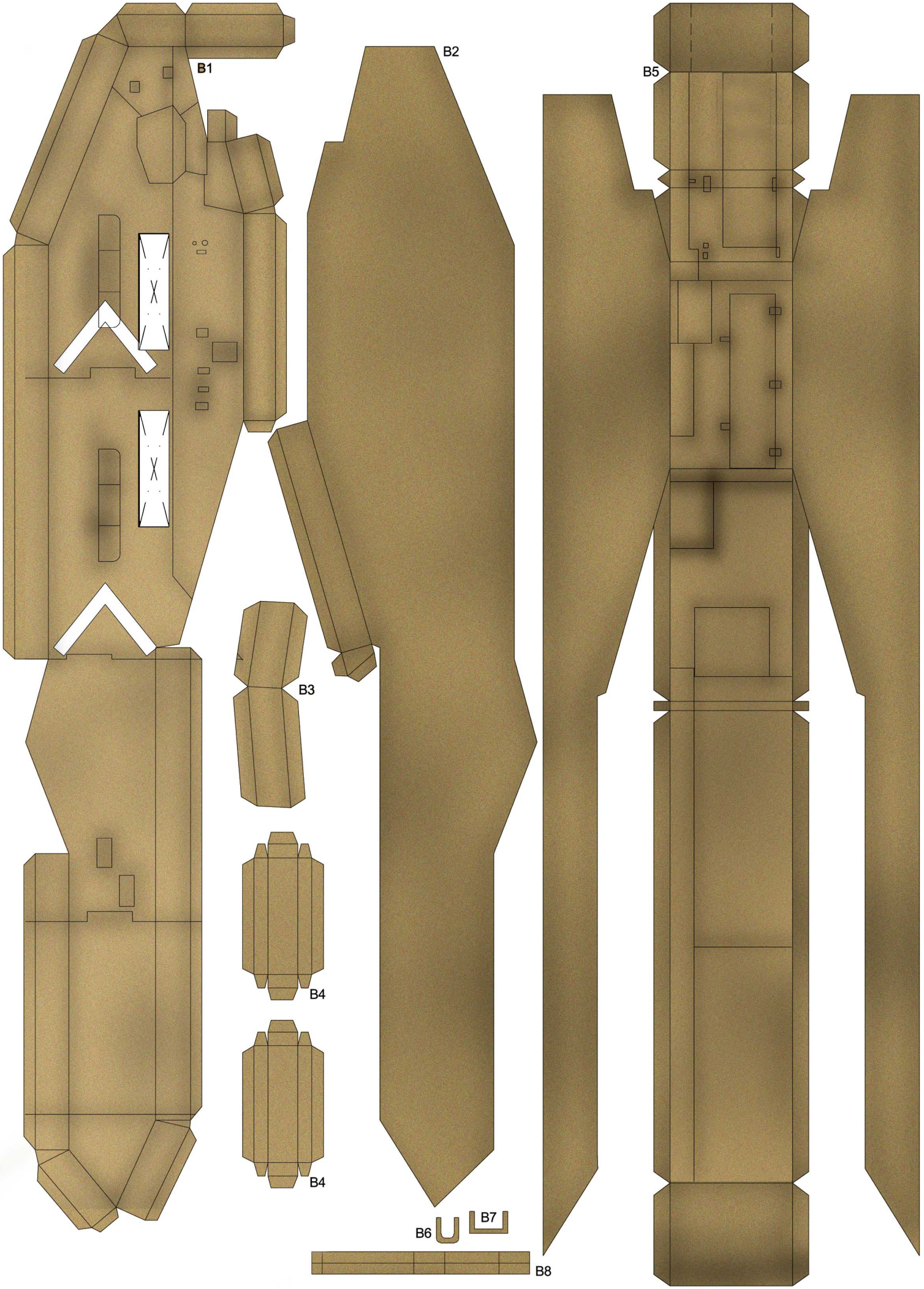

1. This pattern is originally scratch build based on many references and may not perfect yet so I would very appreciate for your critics and advices to improve my design on the next project.
2. This pattern is not for commercial purposes, except for educational. For other purposes, you may contact me for permission.

TEKZ_8@YAHOO.COM
MYHOBBYCRAFT.BLOGSPOT.COM

E.F.F. TYPE 61 TANK 5 1:35 SCALE PAPER MODEL

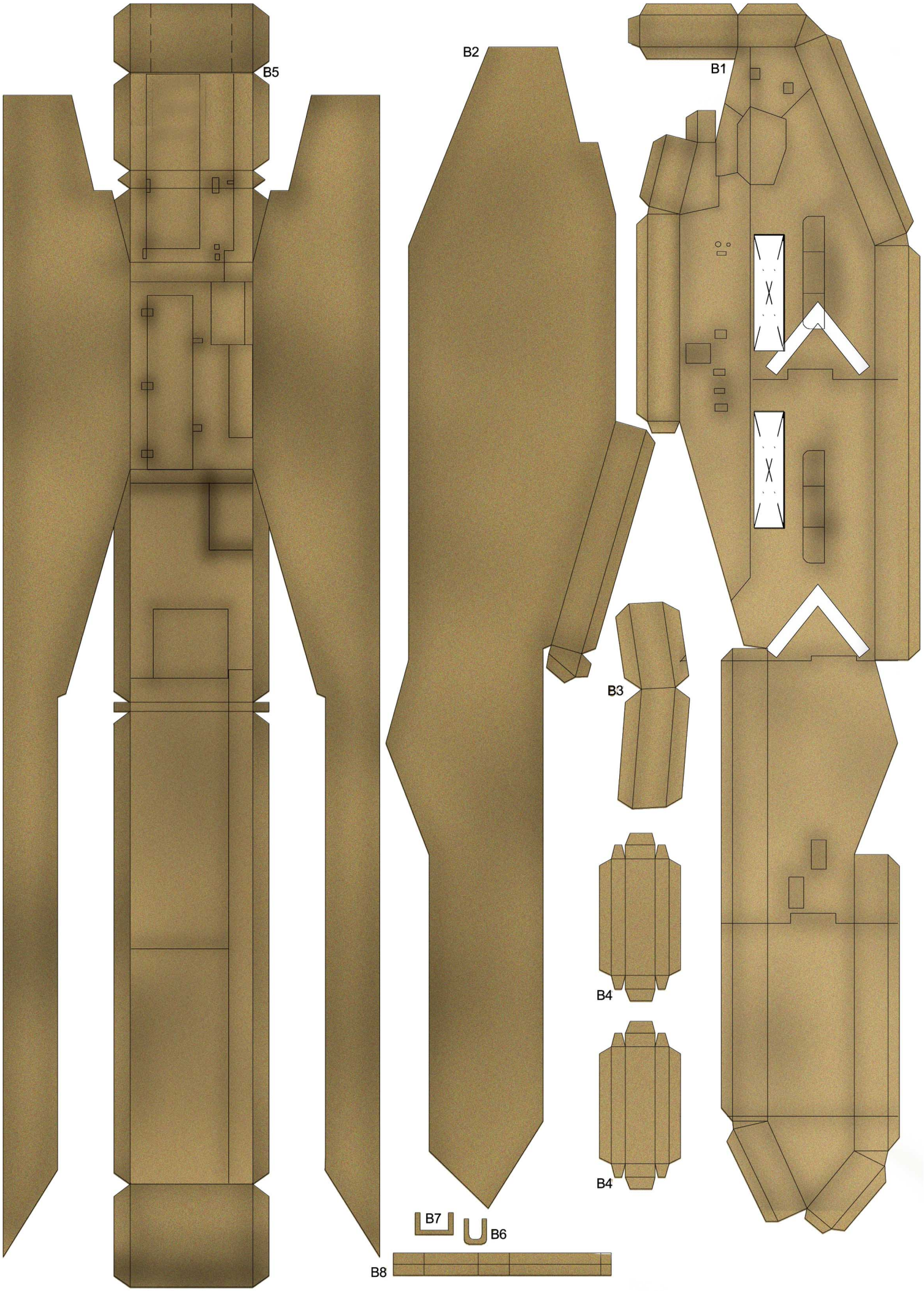

1. This pattern is originally scratch build based on many references and may not perfect yet so I would very appreciate for your critics and advices to improve my design on the next project.
2. This pattern is not for commercial purposes, except for educational. For other purposes, you may contact me for permission.

TEKZ_8@YAHOO.COM
MYHOBBYCRAFT.BLOGSPOT.COM

E.F.F. TYPE 61 TANK 5 1:35 SCALE PAPER MODEL

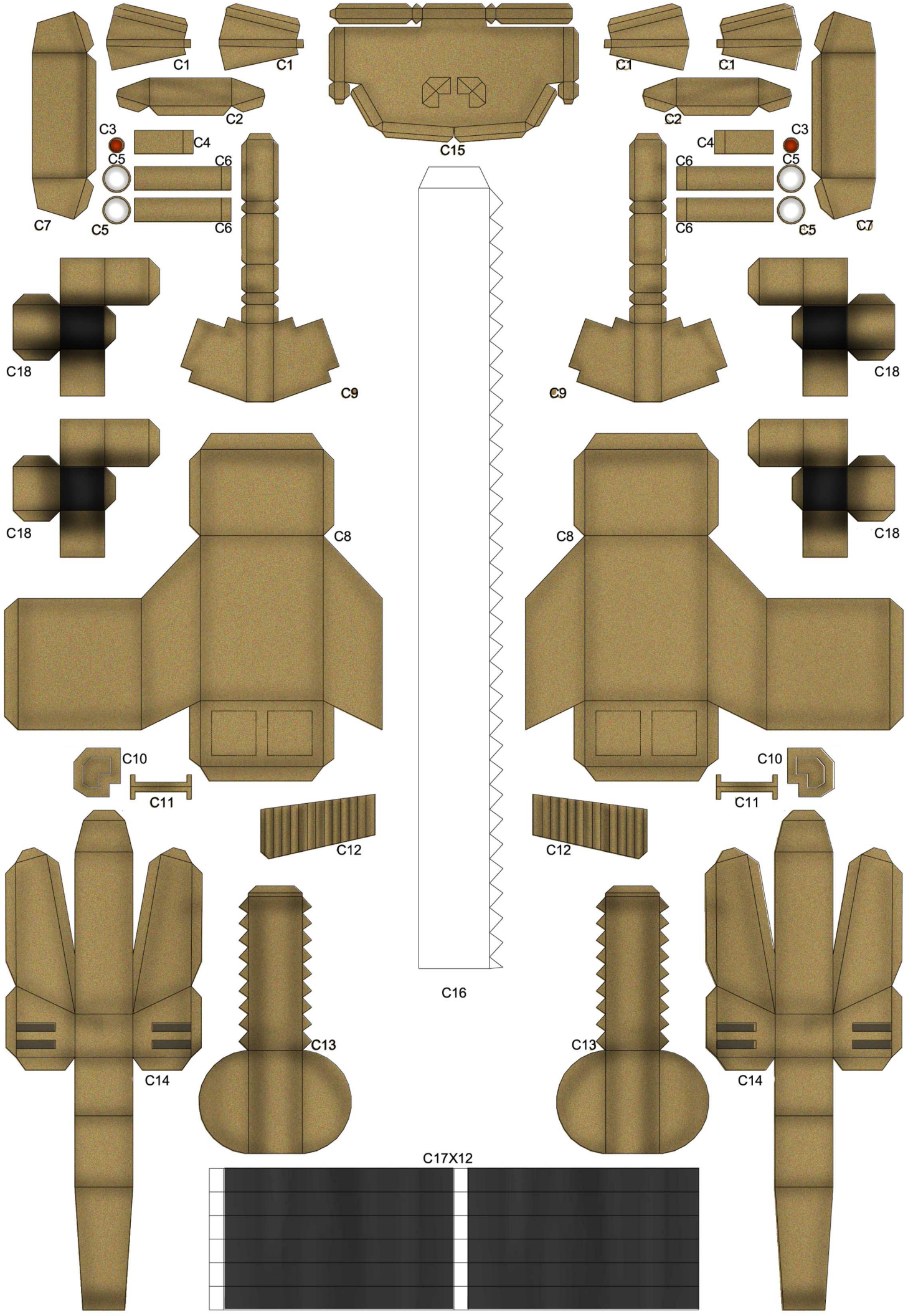

1. This pattern is originally scratch build based on many references and may not perfect yet so I would very appreciate for your critics and advices to improve my design on the next project.
2. This pattern is not for commercial purposes, except for educational. For other purposes, you may contact me for permission.

TEKZ_8@YAHOO.COM
MYHOBBYCRAFT.BLOGSPOT.COM

E.F.F. TYPE 61 TANK 5 1:35 SCALE PAPER MODEL



1. This pattern is originally scratch build based on many references and may not perfect yet so I would very appreciate for your critics and advices to improve my design on the next project.
2. This pattern is not for commercial purposes, except for educational. For other purposes, you may contact me for permission.

TEKZ_8@YAHOO.COM
MYHOBBYCRAFT.BLOGSPOT.COM

E.F.F. TYPE 61 TANK 5 1:35 SCALE PAPER MODEL

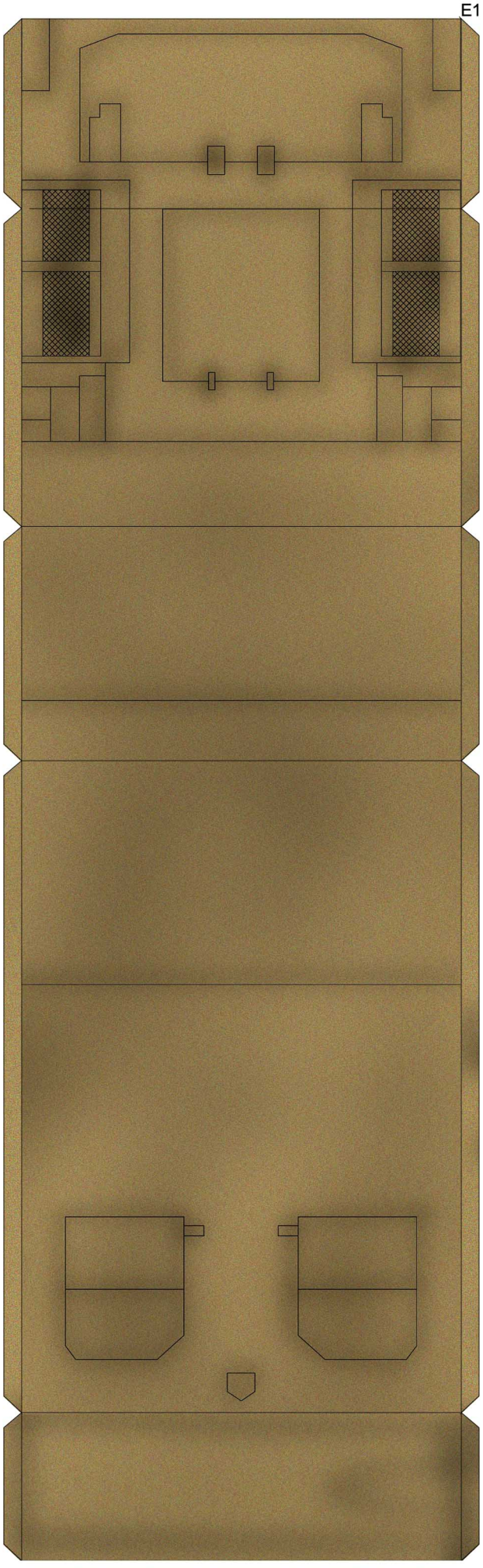

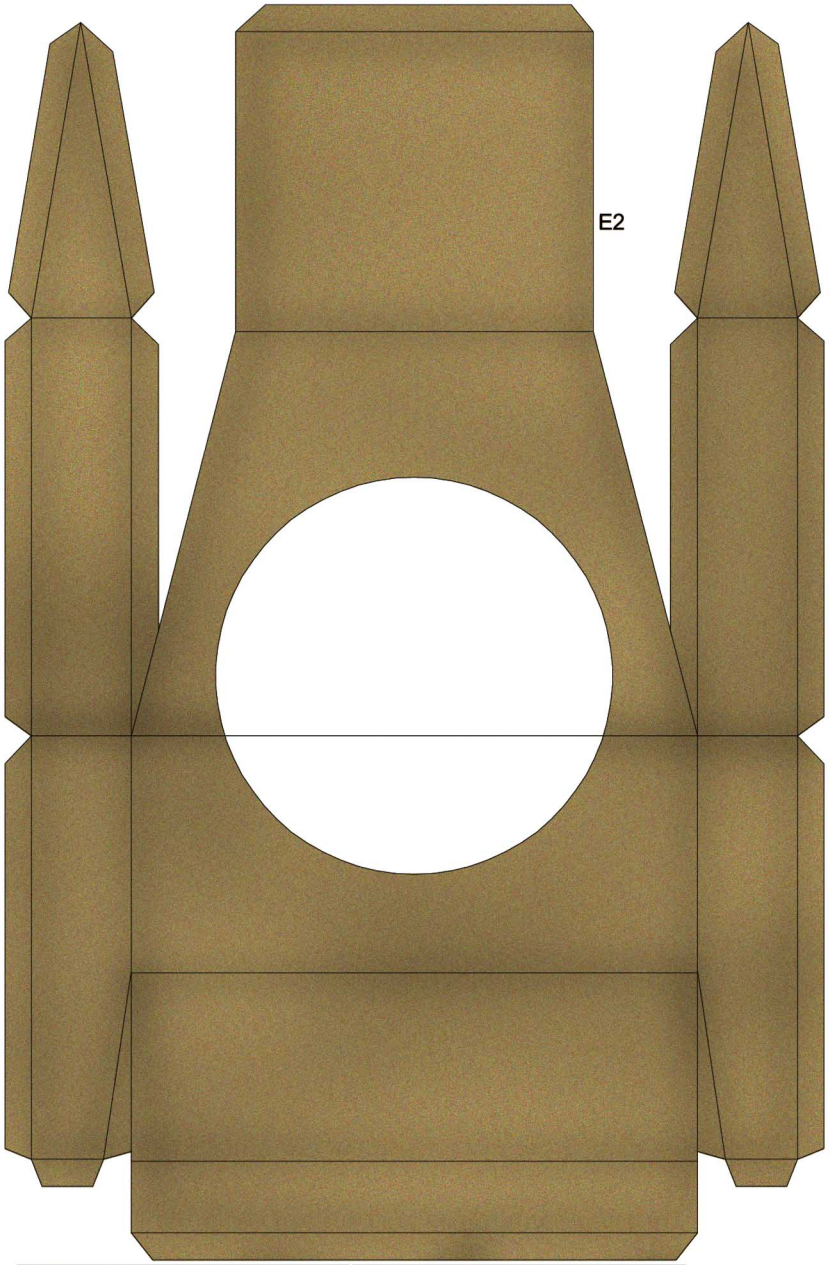

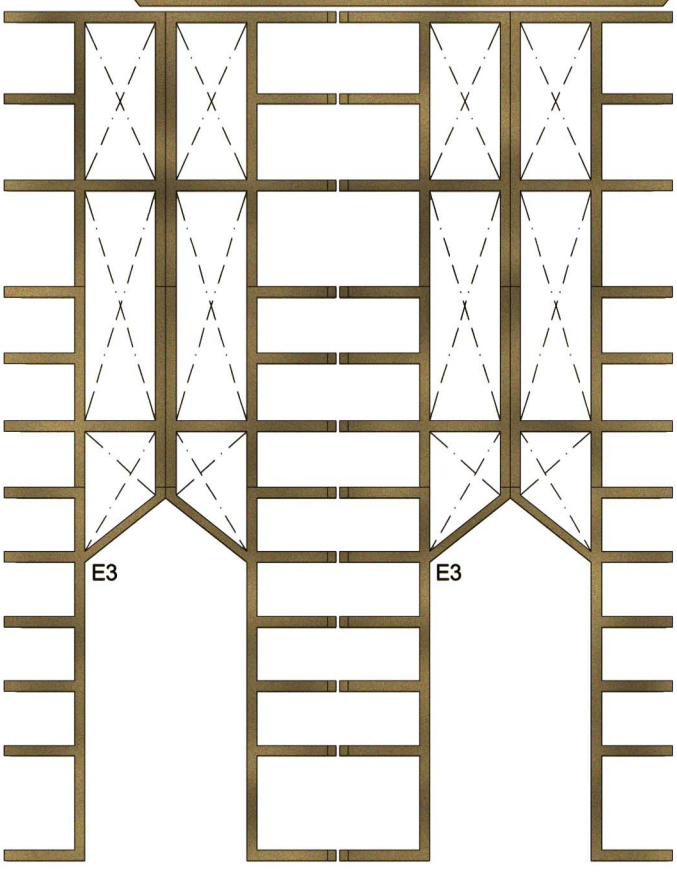

1. This pattern is originally scratch build based on many references and may not perfect yet so I would very appreciate for your critics and advices to improve my design on the next project.
2. This pattern is not for commercial purposes, except for educational. For other purposes, you may contact me for permission.

TEKZ_8@YAHOO.COM
MYHOBBYCRAFT.BLOGSPOT.COM

E.F.F. TYPE 61 TANK 5 1:35 SCALE PAPER MODEL

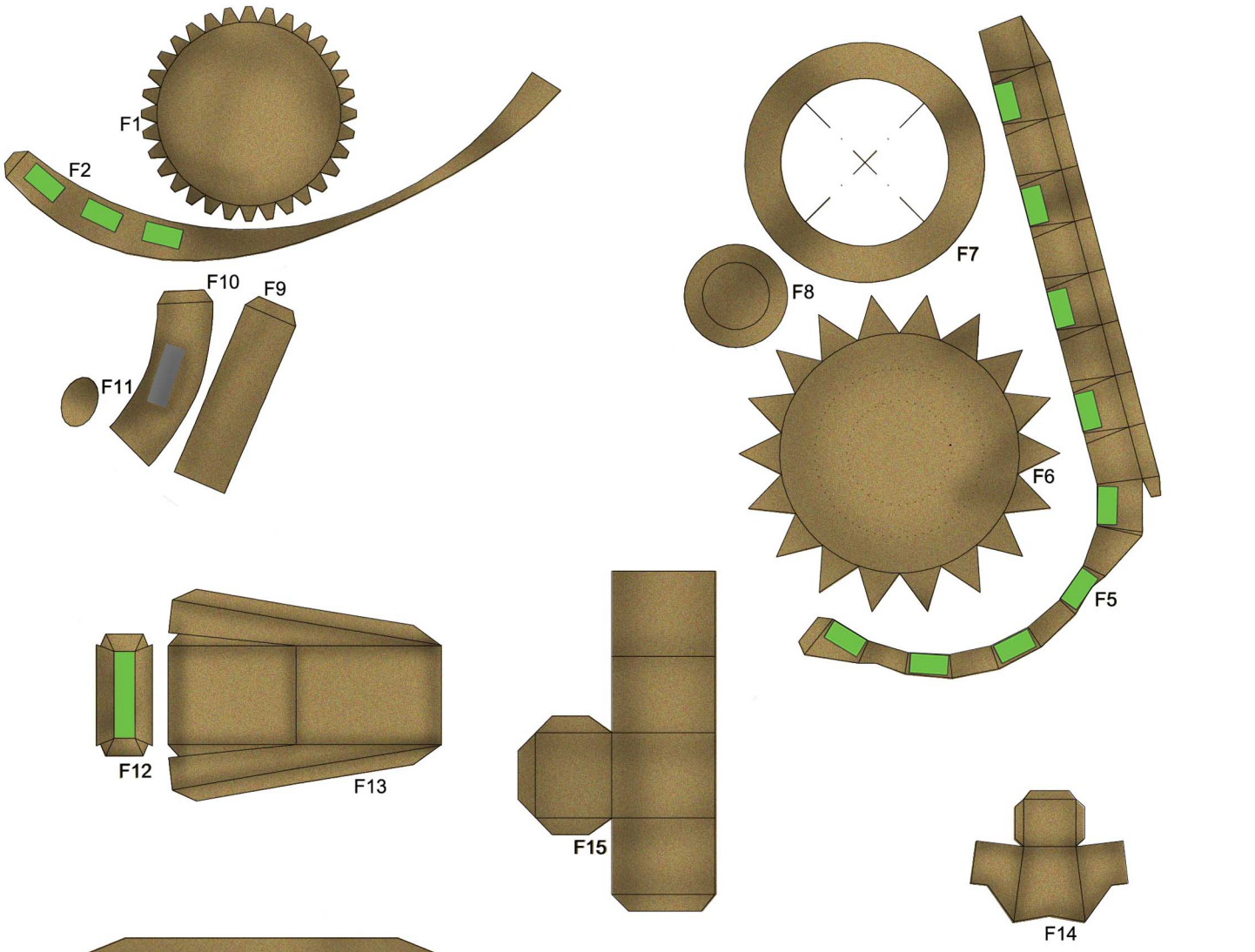

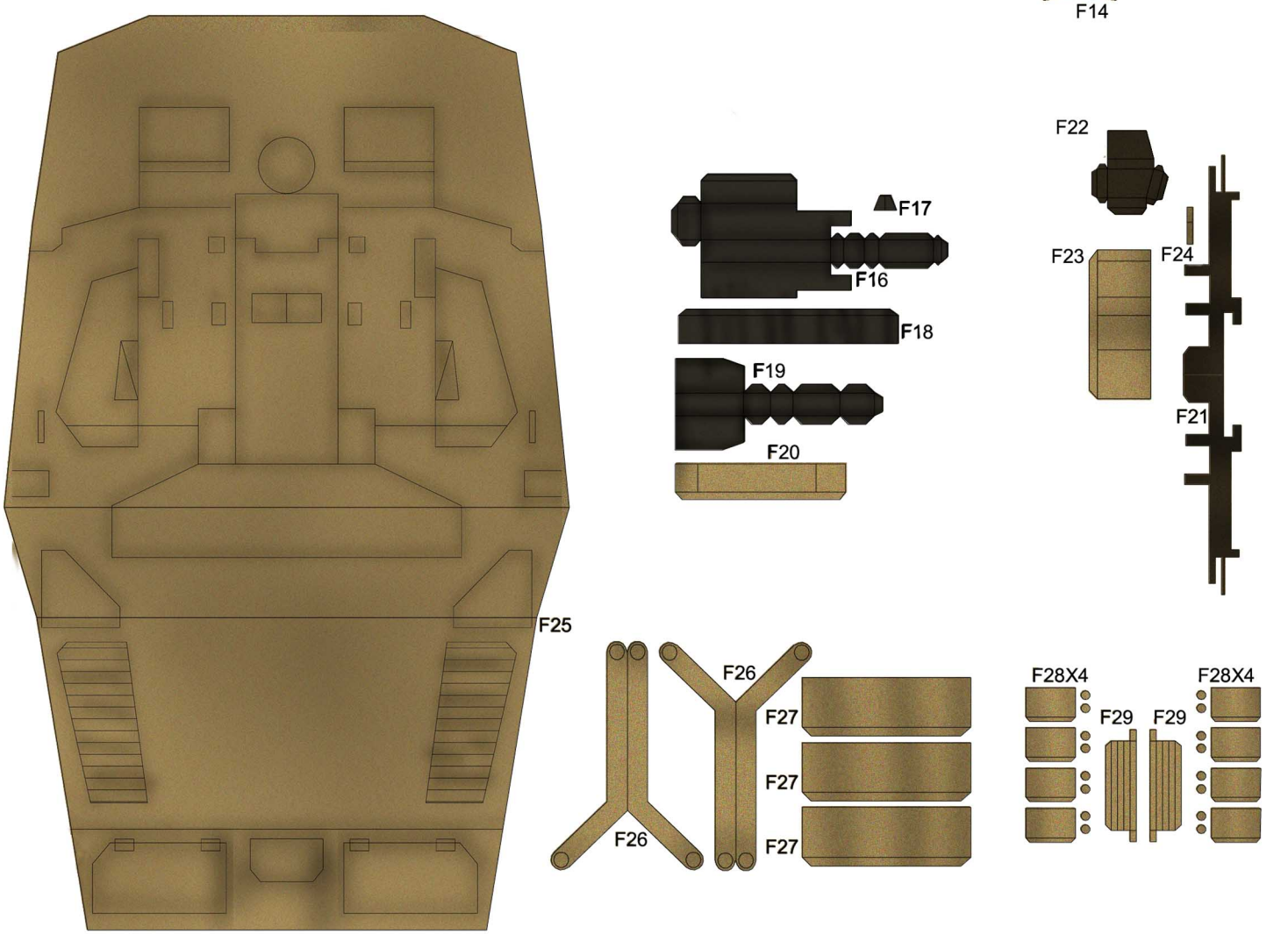

1. This pattern is originally scratch build based on many references and may not perfect yet so I would very appreciate for your critics and advices to improve my design on the next project.
2. This pattern is not for commercial purposes, except for educational. For other purposes, you may contact me for permission.

TEKZ_8@YAHOO.COM
MYHOBBYCRAFT.BLOGSPOT.COM

E.F.F. TYPE 61 TANK 5 1:35 SCALE PAPER MODEL

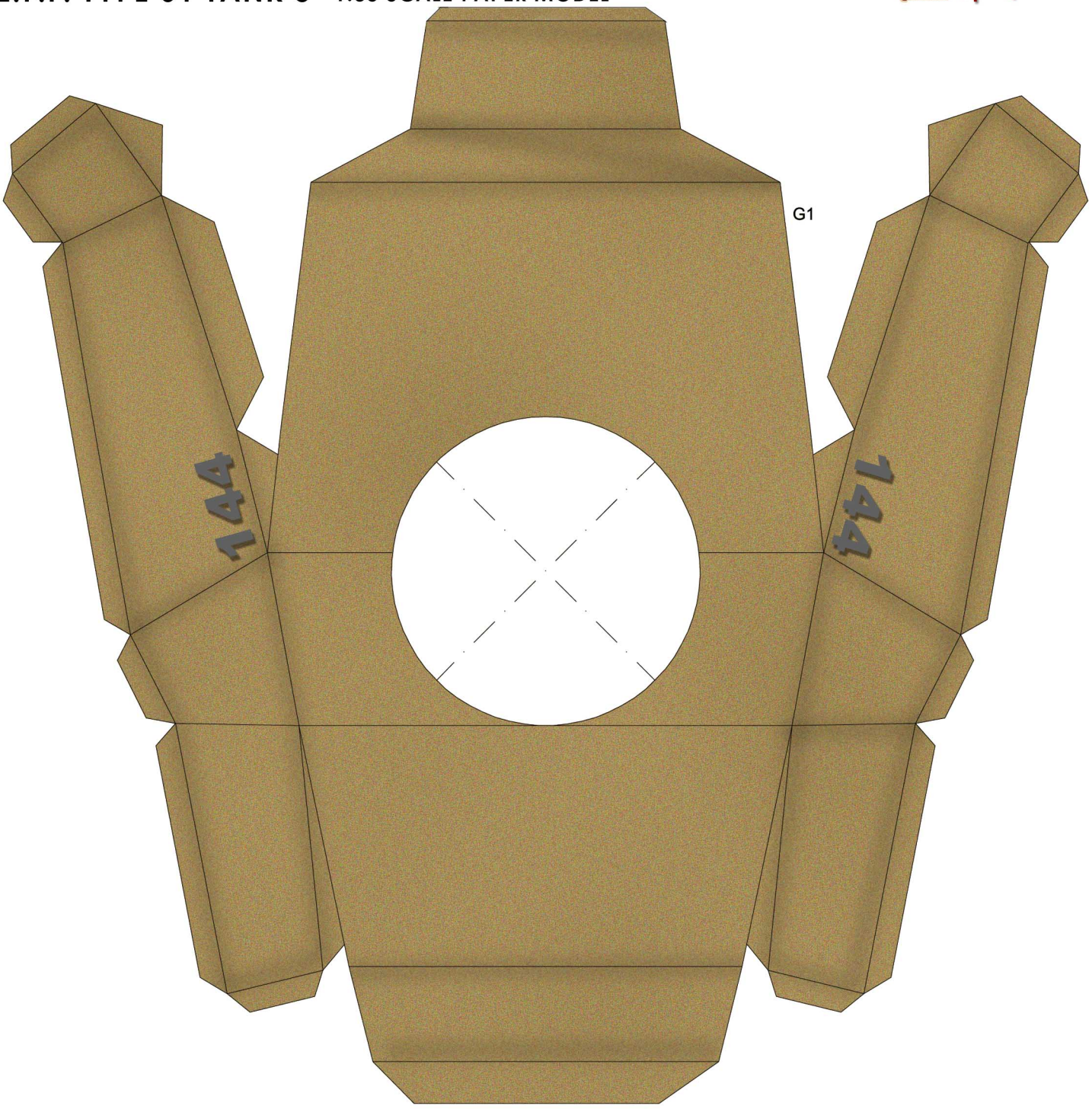





1. This pattern is originally scratch build based on many references and may not perfect yet so I would very appreciate for your critics and advices to improve my design on the next project.
2. This pattern is not for commercial purposes, except for educational. For other purposes, you may contact me for permission.

TEKZ_8@YAHOO.COM
MYHOBBYCRAFT.BLOGSPOT.COM

E.F.F. TYPE 61 TANK 5 1:35 SCALE PAPER MODEL

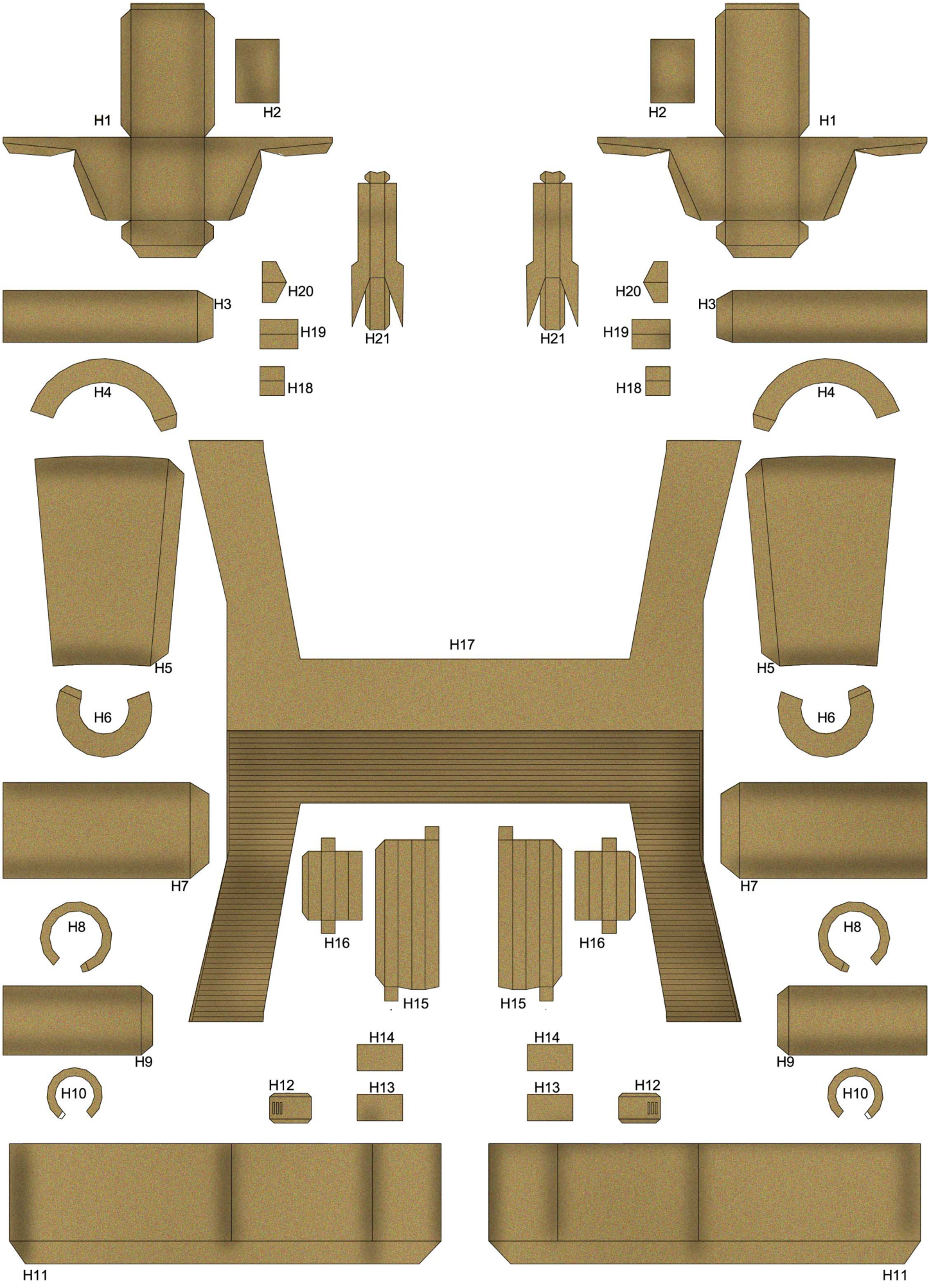

THE GUNS CONSTRUCTION IS FACE TO FACE (NO FLAP)
YOU MAY NEED SOME EXTRA ADJUSTMENT

1. This pattern is originally scratch build based on many references and may not perfect yet so I would very appreciate for your critics and advices to improve my design on the next project.
2. This pattern is not for commercial purposes, except for educational. For other purposes, you may contact me for permission.

TEKZ_8@YAHOO.COM
MYHOBBYCRAFT.BLOGSPOT.COM

E.F.F. TYPE 61 TANK 5 1:35 SCALE PAPER MODEL

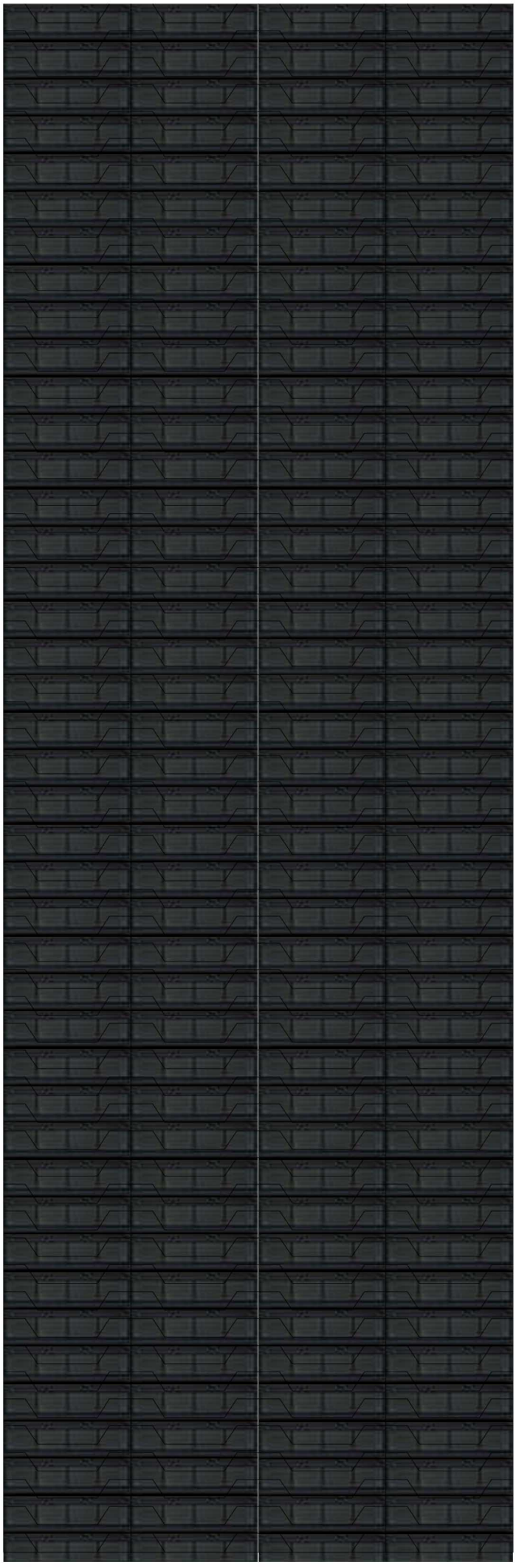



J1

1. This pattern is originally scratch build based on many references and may not perfect yet so I would very appreciate for your critics and advices to improve my design on the next project.
2. This pattern is not for commercial purposes, except for educational. For other purposes, you may contact me for permission.

TEKZ_8@YAHOO.COM
MYHOBBYCRAFT.BLOGSPOT.COM